Assembly Instructions for cabinets: W30, W40, W60/1D

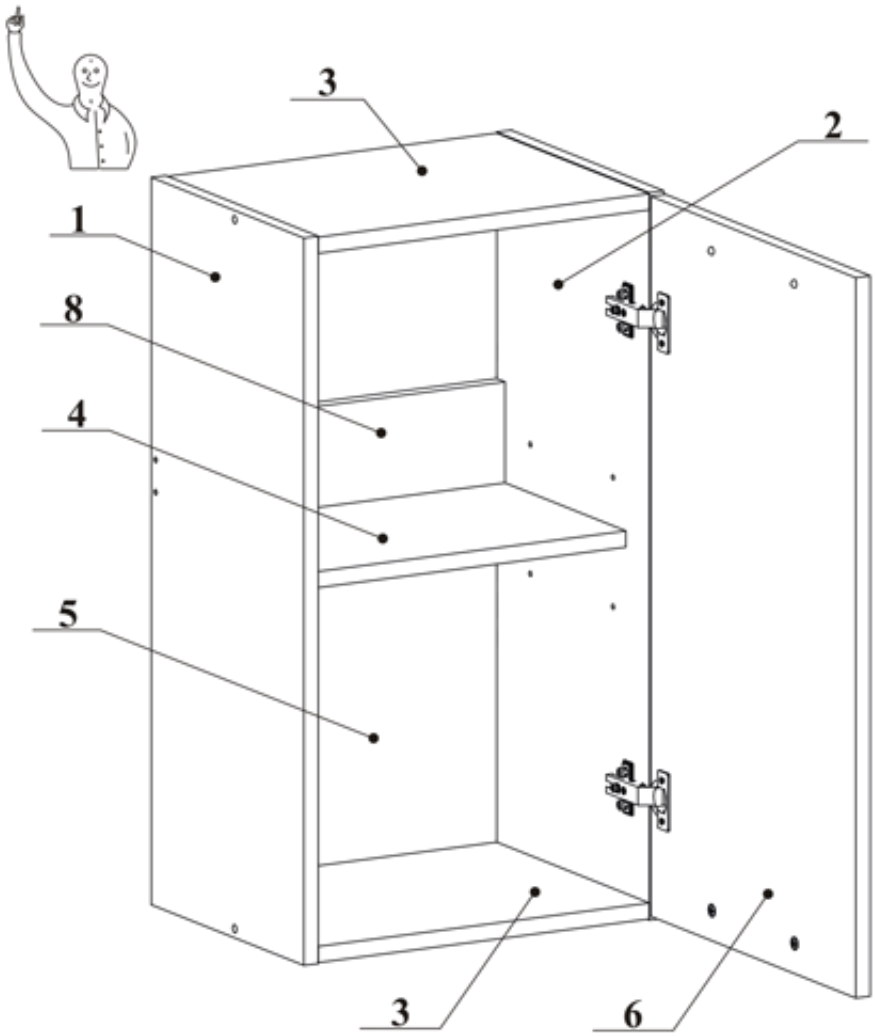

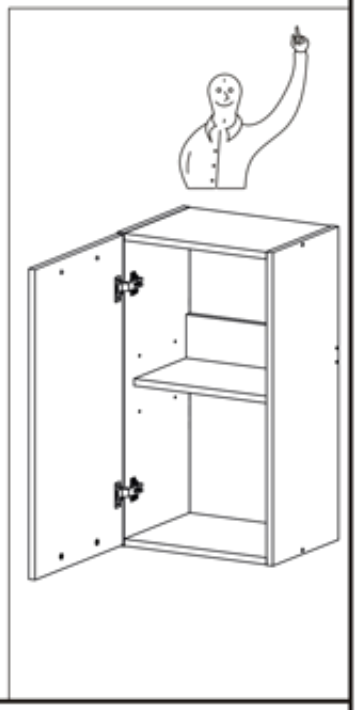

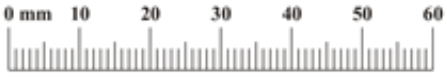

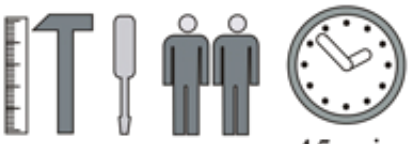

45 min

A1 X8 ø8x36	ZN X1	D26 X2 M4x22	G7 X4	B11 X4 Ø7x50	G4 X4
E7 X2	E8 X2	D10 X4 USØ3,5x13	Z2 X6 Ø5	D40 X4 USØ4x45	G6 X4
B3 W30X21 W40X21 W60/1DX26 Ø1,4x25	G2 X1				

Check all the items are in your box according to the list on this manual. If you are missing anything, please check all other boxes first and then send us an email with a list of the parts you need.

Phone: 09 414 4903 Mobile: 021 369 272 E-mail: info@kitchencabinets.co.nz Website: www.kitchencabinets.co.nz

W30, W40, W60/1D

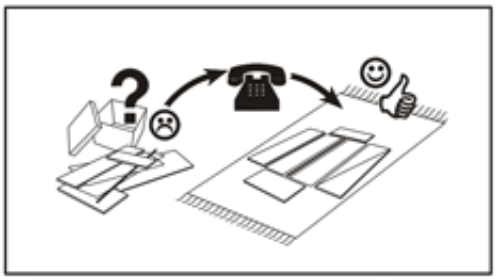

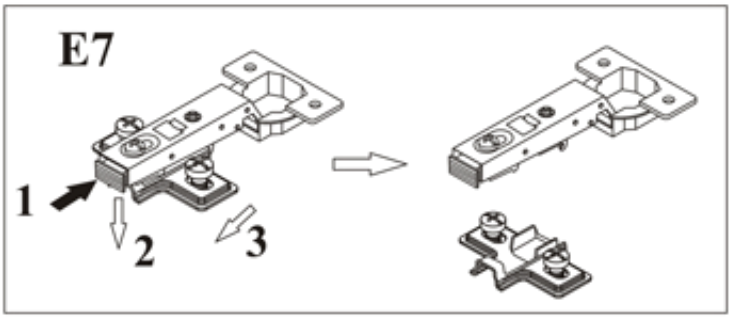

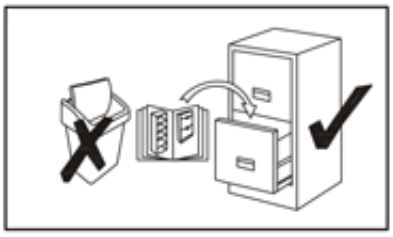

Keep your product assembly manual in a safe place until your kitchen is finished.

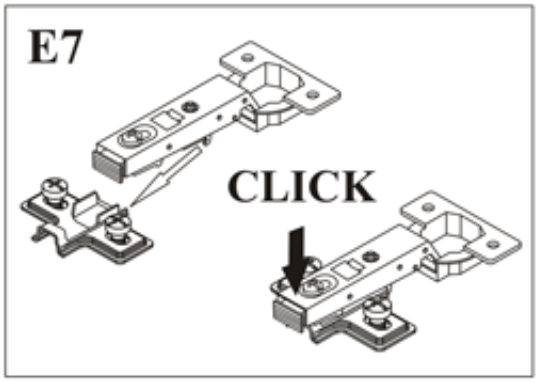

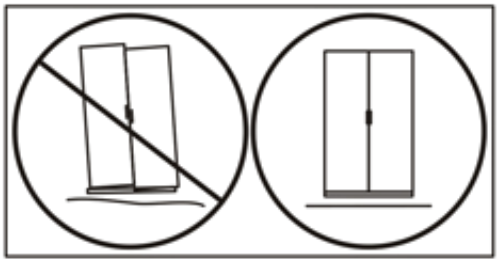

Be sure to assemble your cabinets on a flat surface and keep them straight and square.

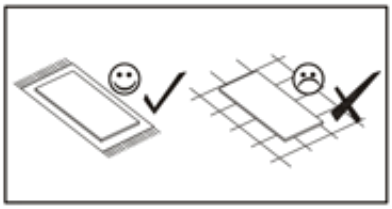

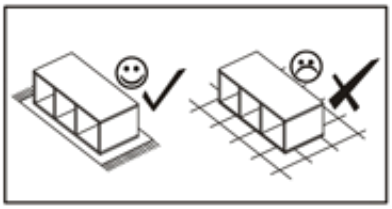

Assemble your cabinets on a rug or a surface that will not scratch or damage them.

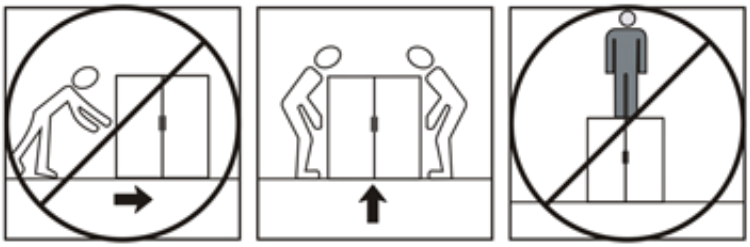

Do not push cabinets into place. Get someone to help you lift the cabinets into place, or you could risk damaging the feet.
Do not stand on the cabinets.

Once protective film on thermal wrap doors is removed, do not clean for 7 days. This allows the surface to harden. Only clean the cabients with a small amount of warm water or non harsh chemicals.

Phone: 09 414 4903 Mobile: 021 369 272 E-mail: info@kitchencabinets.co.nz Website: www.kitchencabinets.co.nz

W30, W40, W60/1D

1

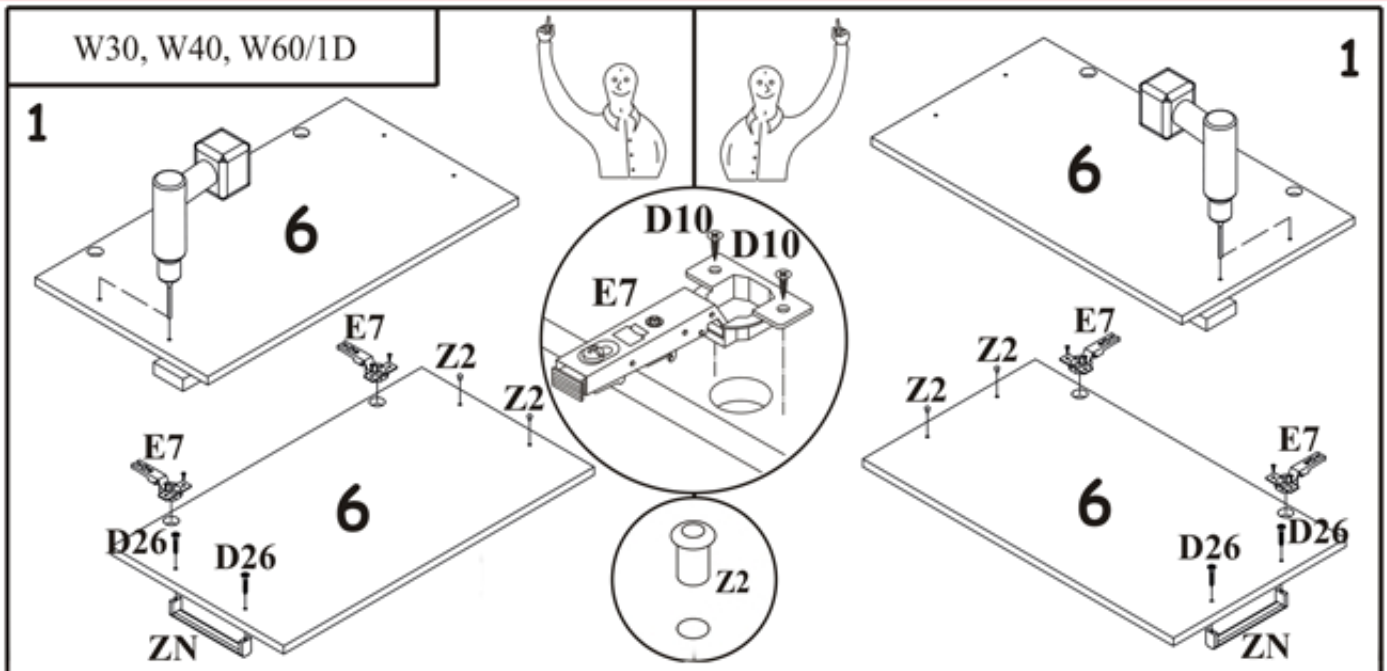

Screw hinges to insides of doors . Drill through and attach handles. Push in Z2 screwhole caps for unused holes.

2

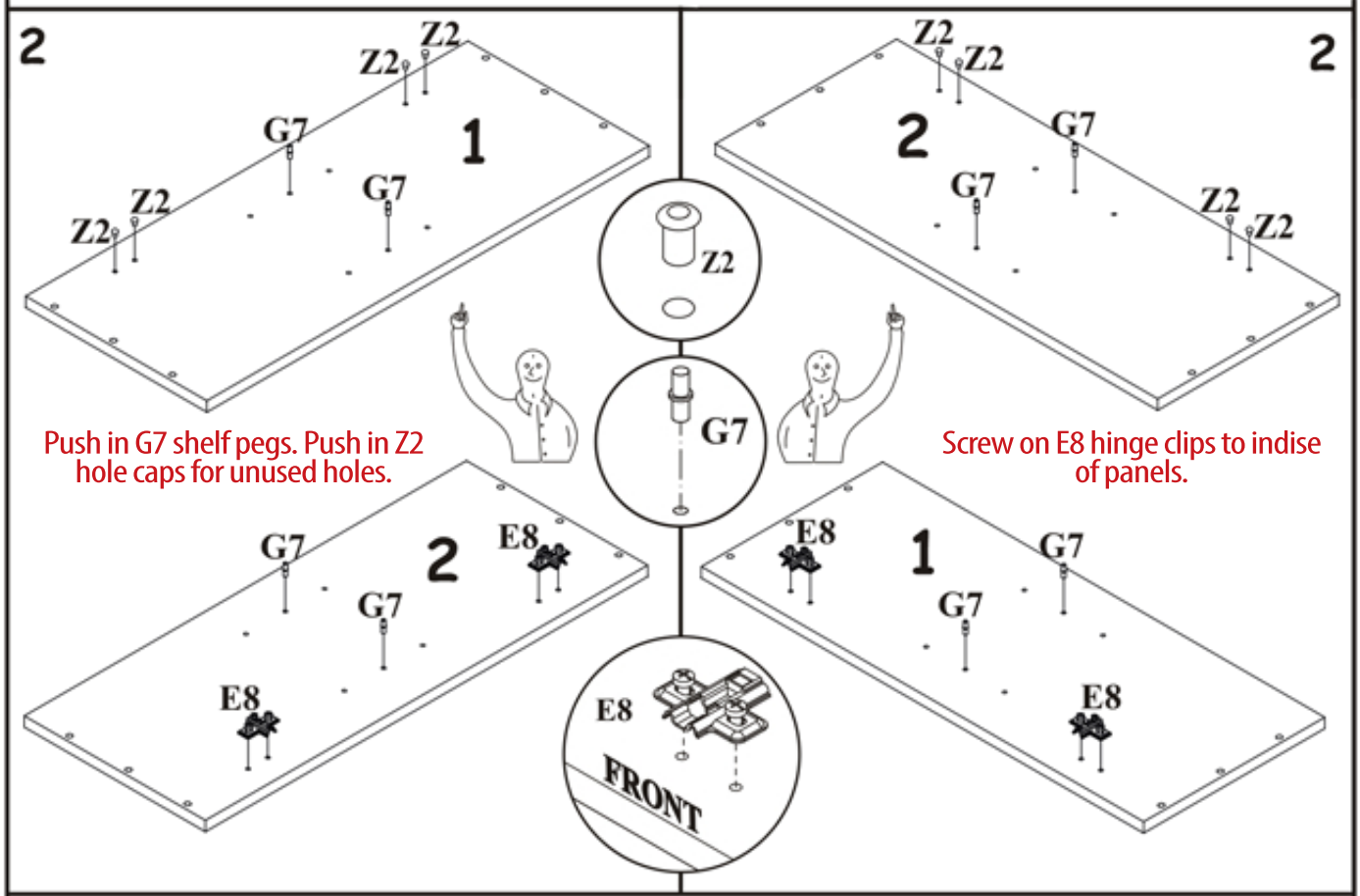

Push in G7 shelf pegs. Push in Z2 hole caps for unused holes.

Screw on E8 hinge clips to indise of panels.

3

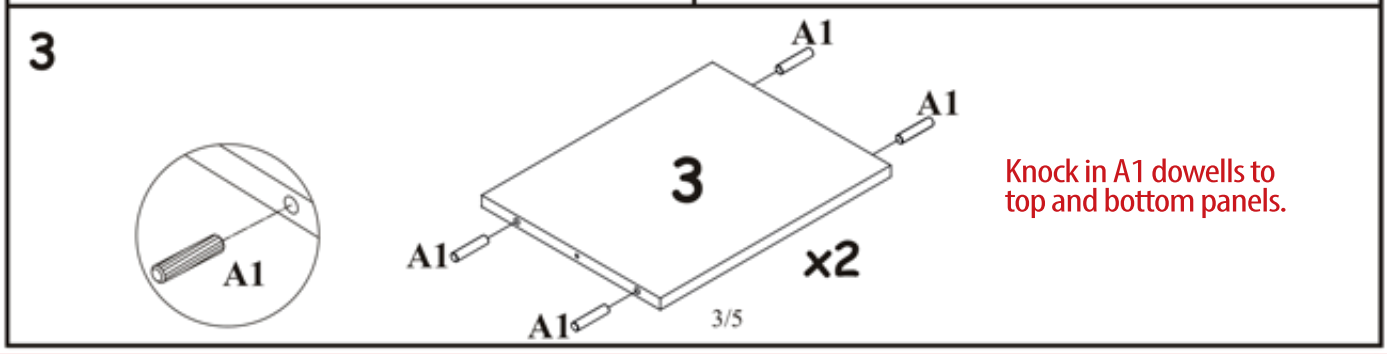

Knock in A1 dowells to top and bottom panels.

Phone: 09 414 4903 Mobile: 021 369 272 E-mail: info@kitchencabinets.co.nz Website: www.kitchencabinets.co.nz

W30, W40, W60/1D

4

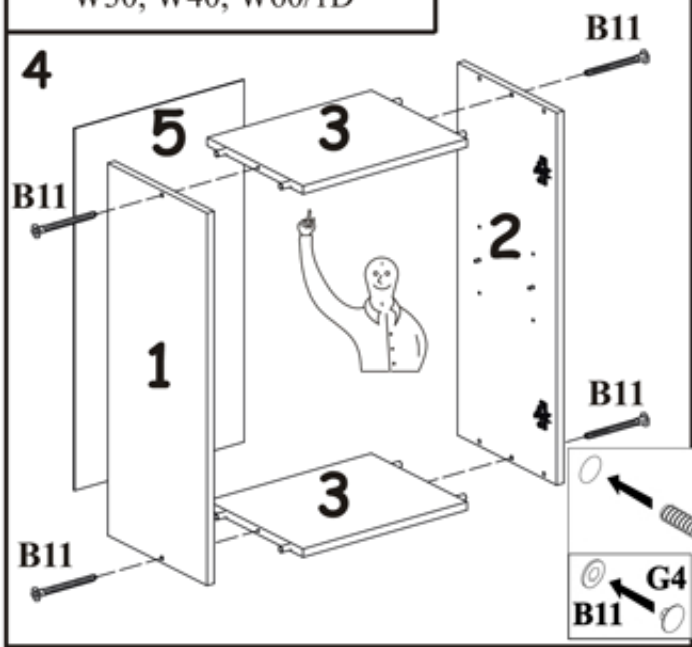

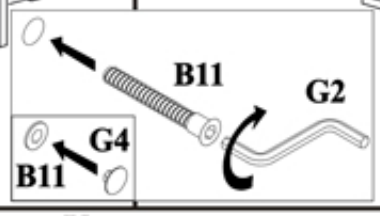

4

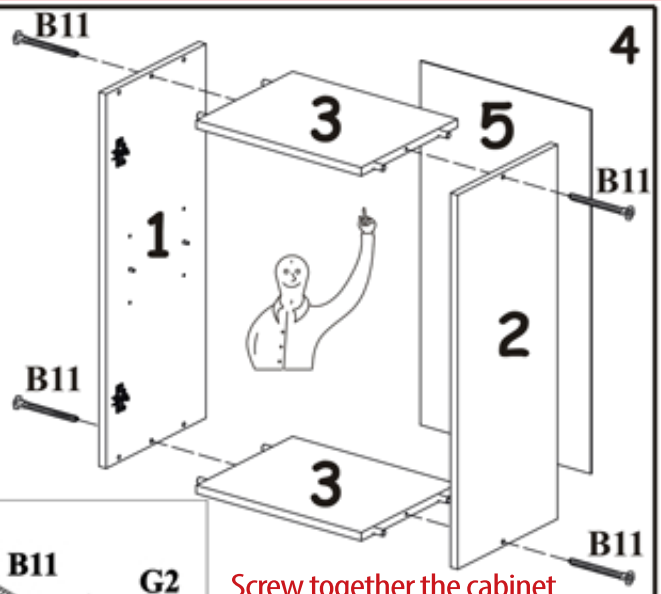

Screw together the cabinet frame with B11 screws and allen key tool. Cover screws with G4 caps.

5

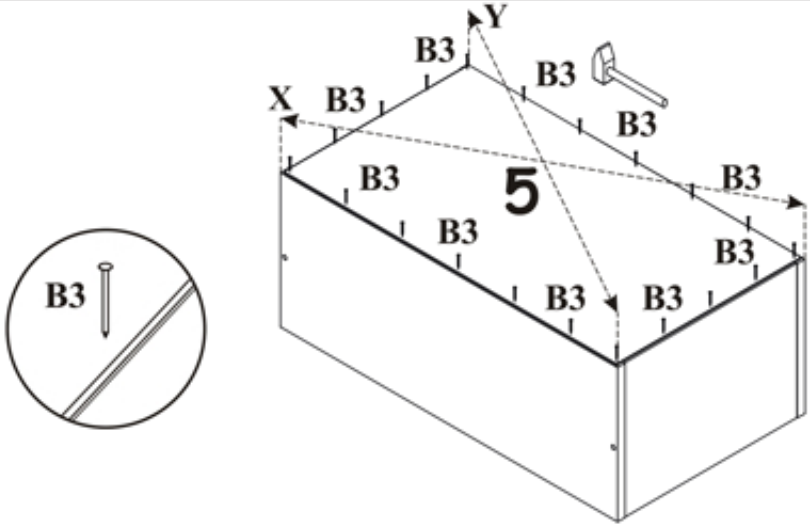

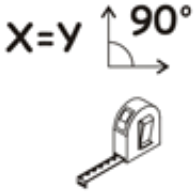

Nail on back panel, making sure it is square with the cabinet.

6

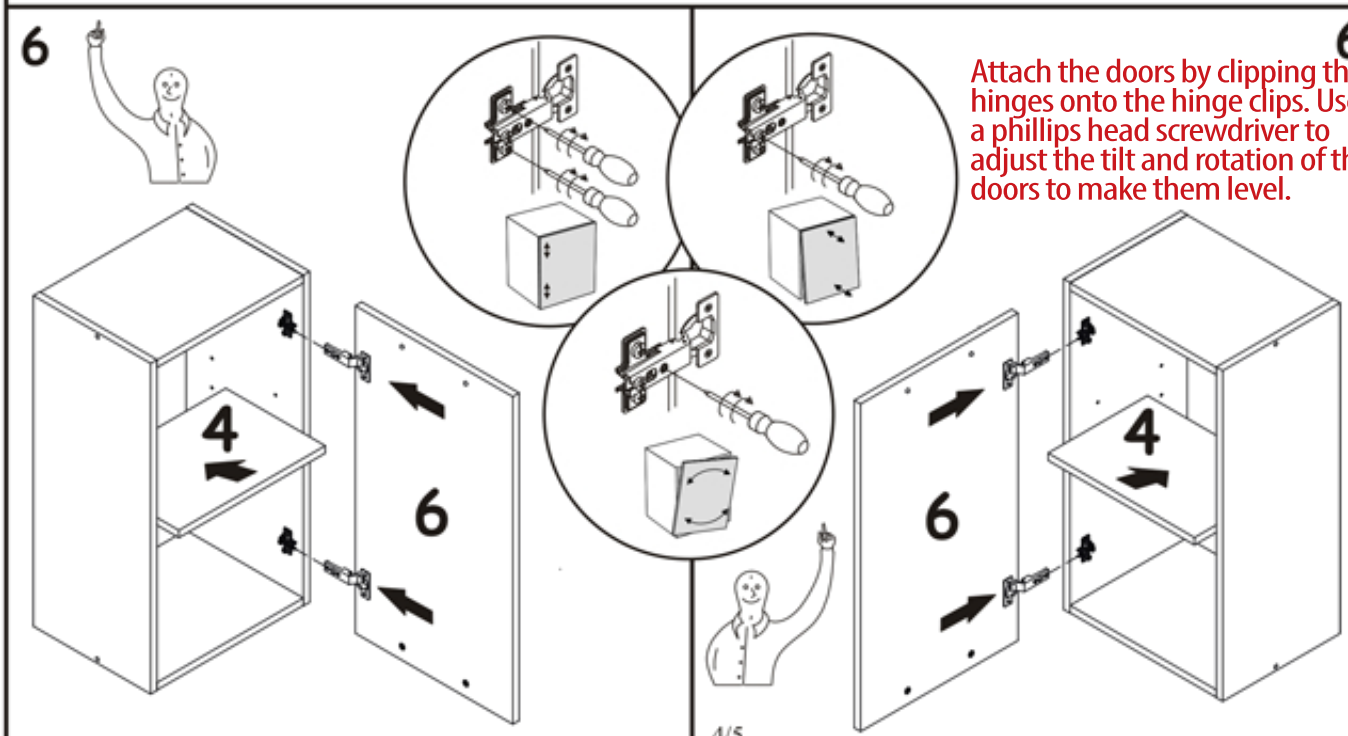

Attach the doors by clipping the hinges onto the hinge clips. Use a phillips head screwdriver to adjust the tilt and rotation of the doors to make them level.

Phone: 09 414 4903 Mobile: 021 369 272 E-mail: info@kitchencabinets.co.nz Website: www.kitchencabinets.co.nz

W30, W40, W60/1D

7

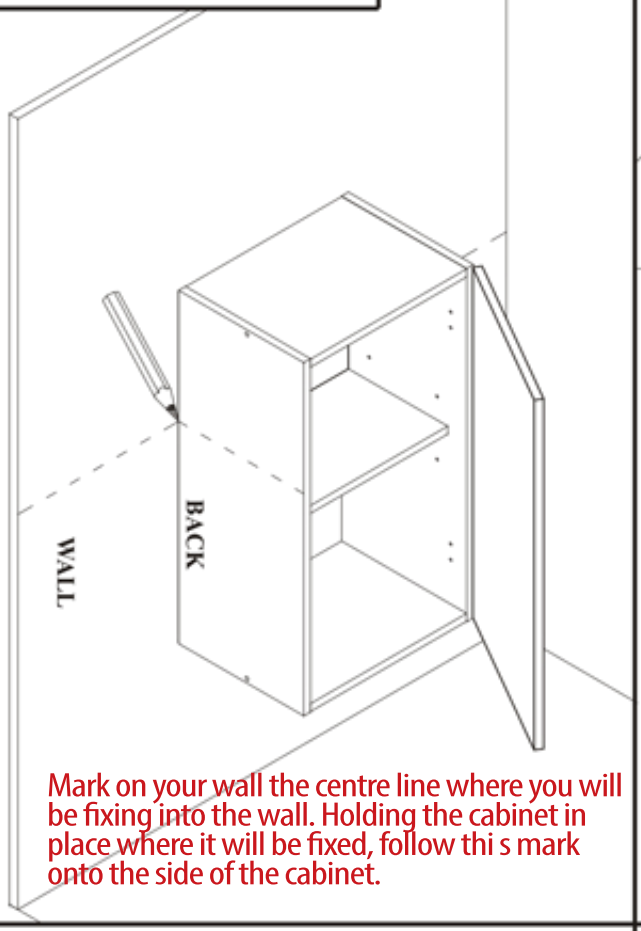

Mark on your wall the centre line where you will be fixing into the wall. Holding the cabinet in place where it will be fixed, follow thi s mark onto the side of the cabinet.

8

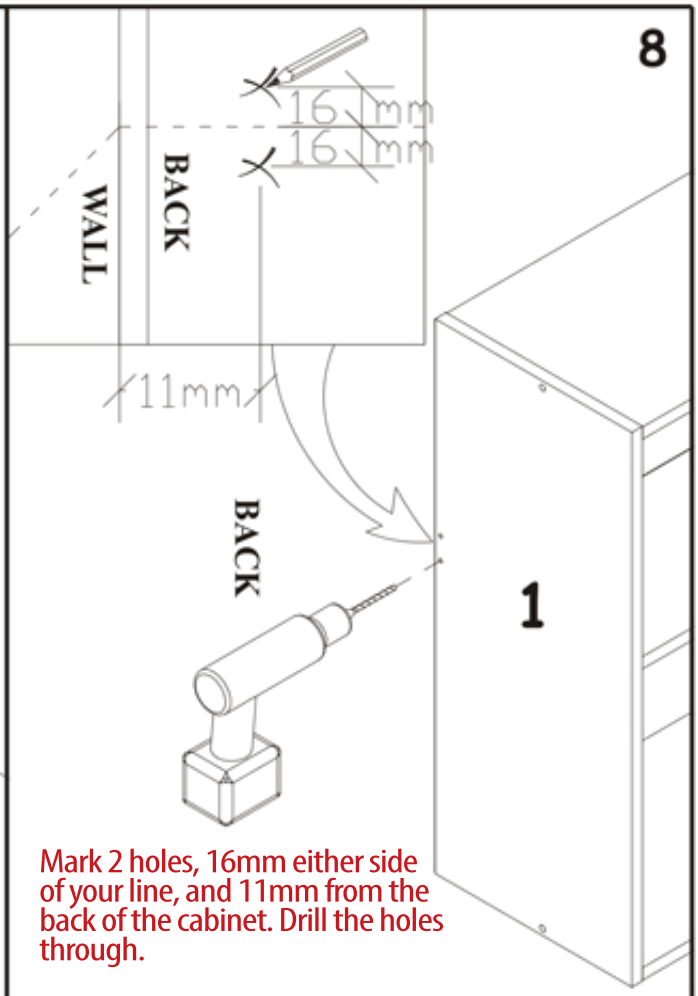

Mark 2 holes, 16mm either side of your line, and 11mm from the back of the cabinet. Drill the holes through.

9

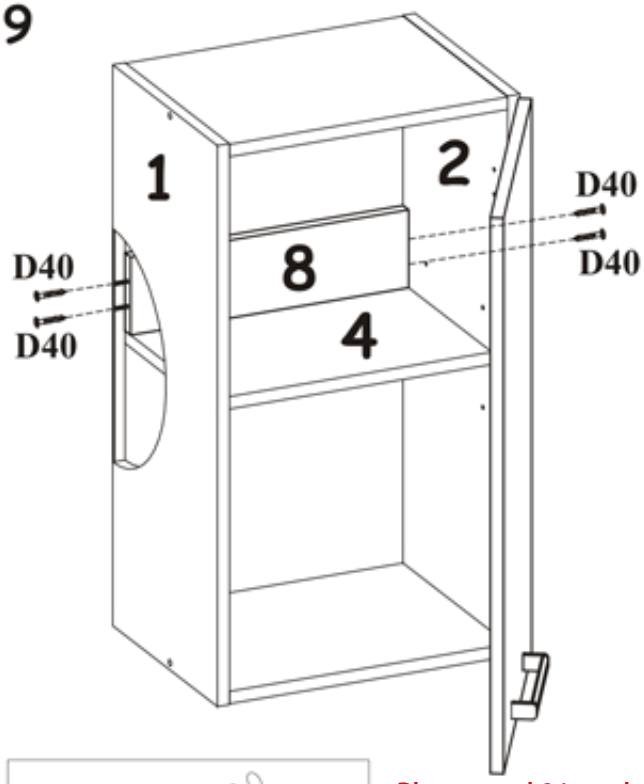

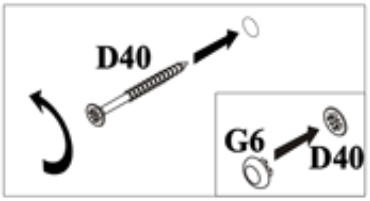

Place panel 8 into the back of the cabinet and screw into place using the holes you drilled.

5/5

10

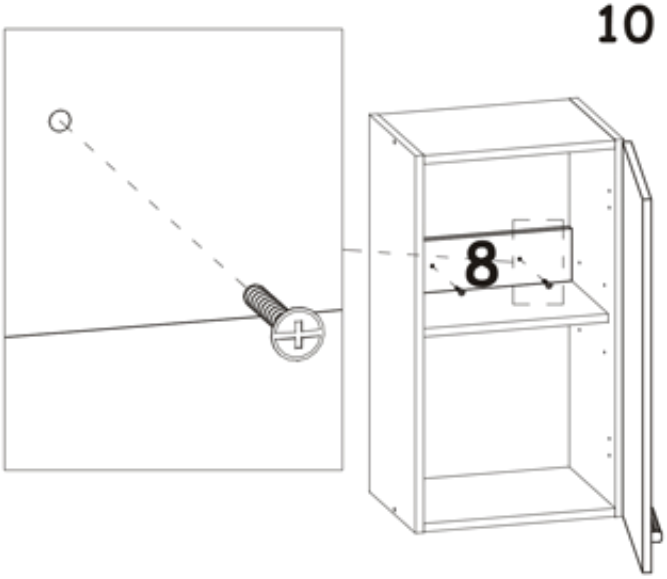

SCREWS FOR FIXING THE CABINET MUST BE PURCHASED ON YOUR OWN IN THE SPECIALISTIC SHOP

Visit your local hardware store to confirm and purchase the correct type of wall fixings to suit your wall type.
Now you can screw your cabinet to the wall through panel 8.